VL Series

Vacuum Power Unit

Standard Features

- 10 to 50 horsepower available
- Positive displacement blower
- T-frame TEFC motor
- Dual-stage intake filter
- Discharge silencer designed for effective sound reduction
- Vacuum relief valve and gauge
- Reinforced, heavy steel base plate
- Four-sided belt guard with removable access cover
- Electricals and controls in a NEMA-12/ enclosure
- Power: 460V/3PH/60Hz
- Outdoor service

The VL Series: designed for use in a dual-blower system for conveying of plastic materials; part of a complete material handling system (pictured above is a VL5055)

Process Control Corporation specializes in equipment for bulk conveying of plastic materials. Our conveying equipment is designed to stand up to the toughest demands of your application, including high material flow rates, multiple distribution points and long conveying distances.

To prevent bottle necking and ensure a continuous supply of material to any number of plant sites (silos, surge bins, processing machines, blenders, etc.) Process Control engineers work with you to select the best equipment and integrate it into a reliable system capable of continuous operation and guaranteed performance.

The VL Series Vacuum Power Unit is designed for use as part of a complete dual-blower railcar or truck unloading system.

The VL Series Vacuum Power Unit pulls material (using vacuum) from a source to a CH Series Transfer Station (available separately). Then, the material drops through a rotary feeder to a blowthrough powered by a P Series Power Unit (available separately). The material is then conveyed using pressure to one or many selected distribution points. The VL Series can be part of an integrated material handling system designed to meet your specific needs.

Options

- Special motors
- Special electricals
- Fused disconnect panel
- Proofing interlocks
- Level controls at storage/use points
- Special paint

PROCESS CONTROL CORPORATION

World Headquarters
6875 Mimms Drive, Atlanta, GA 30340 USA
Ph 770.449.8810 Fax 770.449.5445

Process Control GmbH
Birstein, Germany
Ph +19-6051-91 29-0 Fax +19-6051-91 29-99

VL Series Vacuum Power Unit

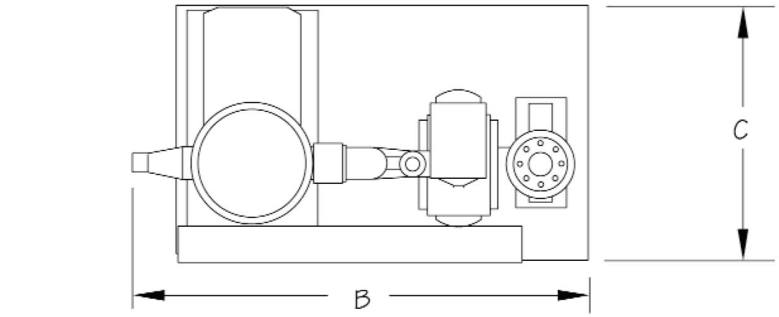

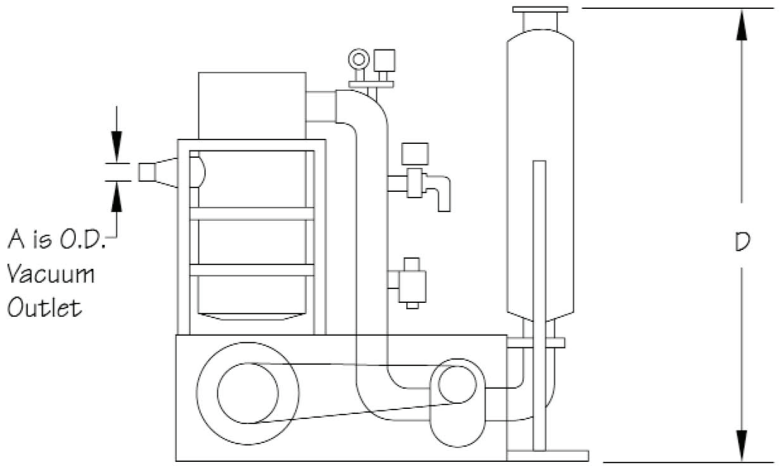

Every unit is factory tested before shipment. Information is subject to change without notice.

Specifications for VL Series Vacuum Power Unit

Model Number	HP (KW)	Dimensions - Inch (mm)				Shipping Weight lbs. (kg)
		A	B	C	D	
VL1025	10 (7.5)	2.5 (64)	55.0 (1397)	29.0 (732)	60.0 (1524)	1595 (725)
VL1530	15 (11.3)	3.0 (76)	78.0 (1981)	36.0 (914)	78.0 (1981)	2321 (1055)
VL2035	20 (15.0)	3.5 (89)				2684 (1220)
VL2540	25 (18.8)	4.0 (102)				2805 (1275)
VL3045	30 (22.5)	4.5 (114)			93.0 (2362)	3102 (1410)
VL4050	40 (30.0)	5.0 (127)				3190 (1450)
VL5055	50 (37.5)	5.5 (140)	84.0 (2134)	42.0 (1067)	106.4 (2692)	3795 (1725)
VL5060	50 (37.5)	6.0 (153)				